

RING 2

Item code	**85.FL01.60P3.03.HDFF**
Product type	**Outdoor**
Category	**Floodlight**
Family	**RING**
Subfamily	**RING 2**
Pictograms	CRI 80 · CE · IP 67

Dimensions	
Product dimensions (mm)	**φ220*H255mm**

Scheme

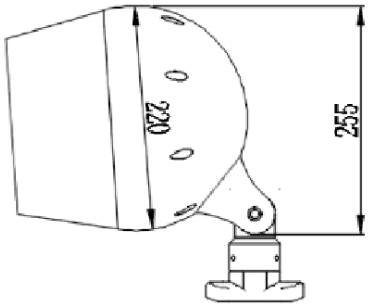

Product	
Real power (W)	**60**
Real luminous flux (Lm)	**5822**
Luminous efficiency (Lm/W)	**98**
Beam angle (º)	**10x35**
Life time (h)	**50000h L90 B10**
IP	**67**
Control gear	**DALI 2**
Net weight (g)	**5000g**
Colour temperature (K)	**3000K**
Colour consistency (SDCM)	**SDCM2**
CRI	**80**
IK	**08**